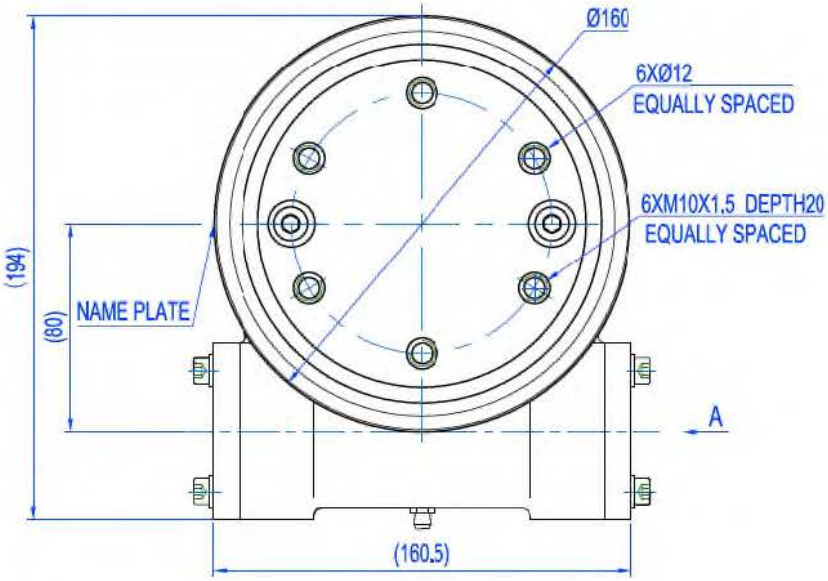

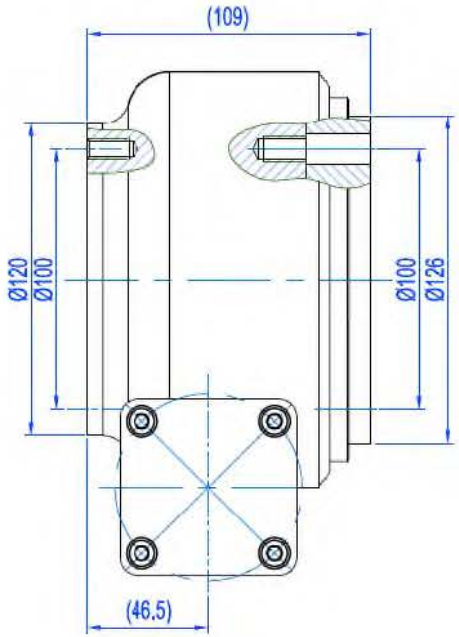

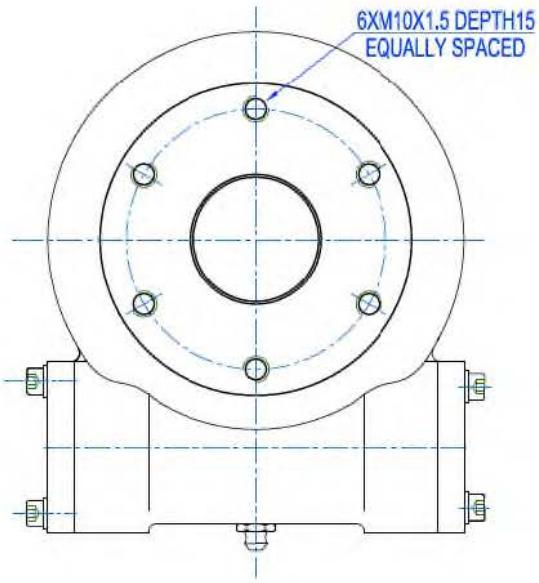

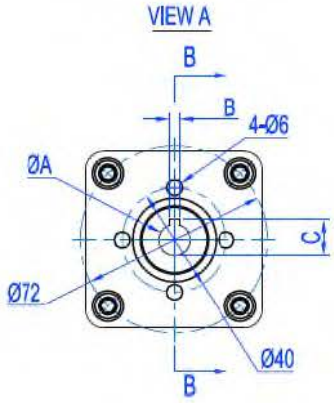

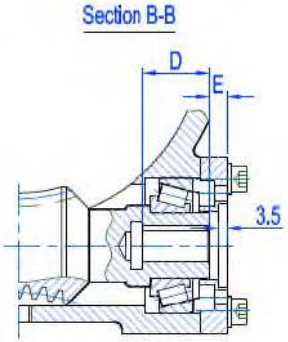

UNIT: mm

TYPE	A	B	C	D	E
12M	$12^{-0.055}_{-0.105}$	$4^{+0.05}_{+0.02}$	$13.8^{+0.2}_{0}$	25.5	6.75

DESIGNED BY				
CHECKED BY				
APPROVED BY				
ALL PROPRIETARY RIGHTS IN THE SUBJECT MATTER HEREOF ARE RESERVED, AND NO PERMISSION IS GRANTED TO REPRODUCE THIS PRINT IN WHOLE OR IN PART, OR TO DISCLOSE ANY OF THE INFORMATION TO OTHERS.		WEIGHT	SCALE	BROWN ADVANCE
		12.3Kg	NTS	3" SLEWING DRIVE
SYMBOLE ISO	SIZE A3	SHEET	1/1	SE3B-62M-RC
		THE TOLERANCE NOT MENTIONED IS REFERRED TO ISO 2768—vL CASTING TOLERANCE ISO 8062—CT10		REV A

SLEWING DRIVES PERFORMANCE DATA

Model Code : SE3B-62M-RC

Slewing Drive Ratio	62:1
Rotating Output Rated Speed	–
Efficiency	30%
International Protection (IP)	55
Motor Temperature	–
Worm Drive Temperature	– 20℃ to + 120℃
Traceability	CEDS
Torsion Stiffness	137 Nm/mRad
Bending Stiffness	190Nm/mRad

Slewing Drive Loading Data	HC Type				HQ Type			
Normal Output Torque	201	N·m	148	ft·lb	599	N·m	442	ft·lb
Max. Output Torque(3 sec.)	402	N·m	297	ft·lb	899	N·m	663	ft·lb
Backwards Holding Torque	3,000	N·m	2,213	ft·lb	3,000	N·m	2,213	ft·lb
Tilting Torque	500	N·m	369	ft·lb	500	N·m	369	ft·lb
Static Radial Rating	16.60	KN	3,732	lb	16.60	KN	3,732	lb
Static Axial Rating	29.40	kN	6,609	lb	29.40	kN	6,609	lb
Dynamic Radial Rating	8.40	KN	1,888	lb	8.40	KN	1,888	lb
Dynamic Axial Rating	9.60	kN	2,158	lb	9.60	kN	2,158	lb

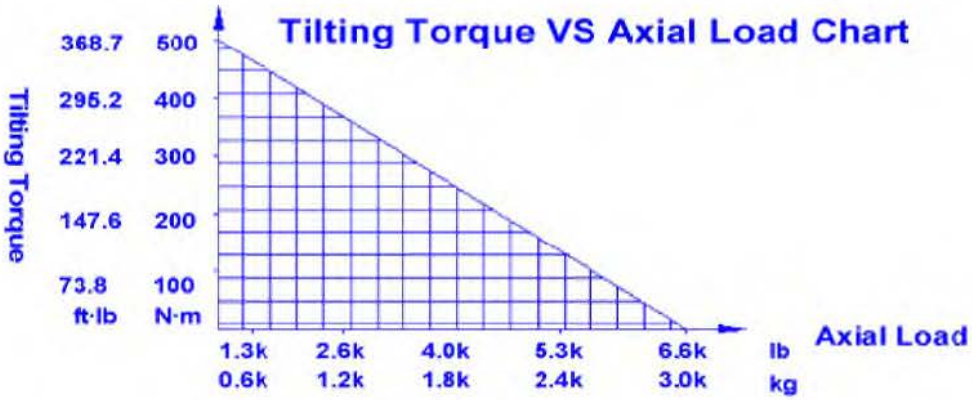

DESIGNED BY			BROWN ADVANCE	
CHECKED BY				
APPROVED BY				
ALL PROPRIETARY RIGHTS IN THE SUBJECT MATTER HEREOF ARE RESERVED, AND NO PERMISSION IS GRANTED TO REPRODUCE THIS PRINT IN WHOLE OR IN PART, OR TO DISCLOSE ANY OF THE INFORMATION TO OTHERS.	WEIGHT	SCALE NTS	3" SLEWING DRIVE	
SYMBOLE ISO	SIZE A4	SHEET 1/1	SE3B-62M-RC	REV A

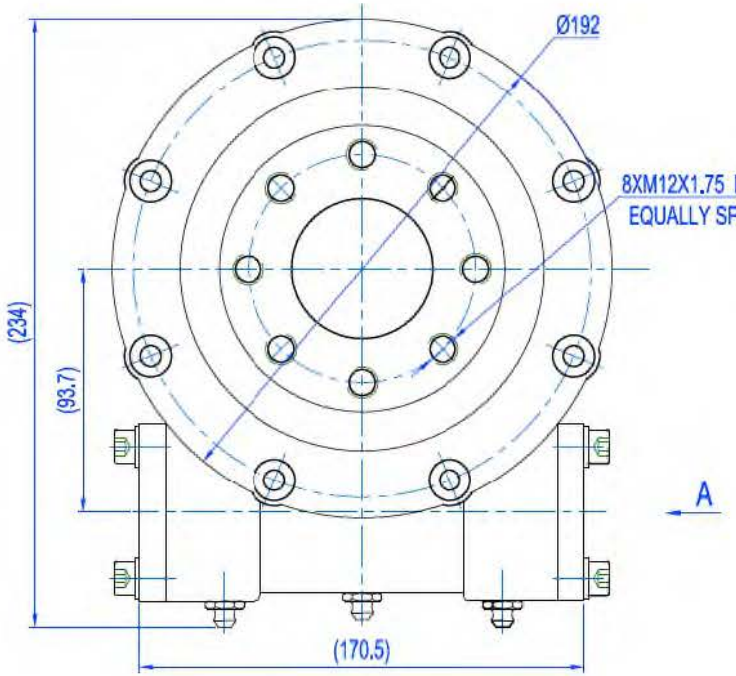

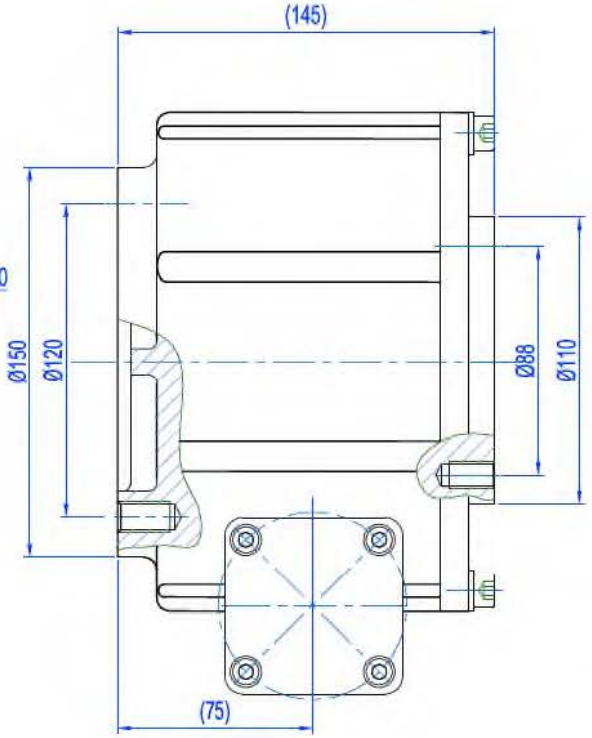

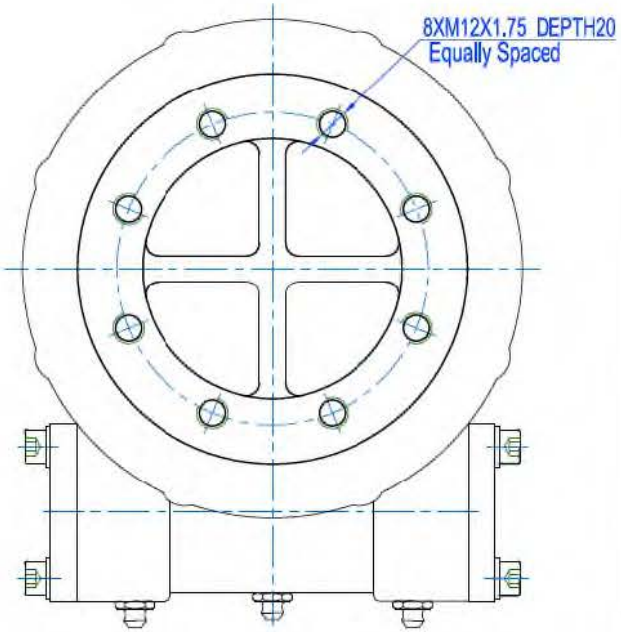

A

VIEW A

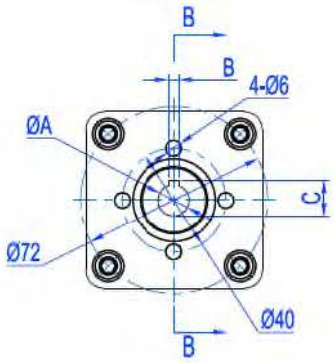

Section B-B

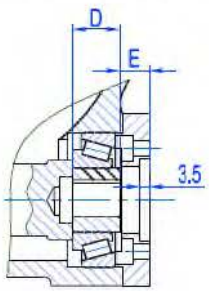

UNIT: mm

TYPE	A	B	C	D	E
12M	$12^{-0.055}_{-0.015}$	$4^{+0.05}_{+0.02}$	$13.8^{+0.2}_{0}$	18	11.25

DESIGNED BY				
CHECKED BY				
APPROVED BY				
ALL PROPRIETARY RIGHTS IN THE SUBJECT MATTER HEREOF ARE RESERVED, AND NO PERMISSION IS GRANTED TO REPRODUCE THIS PRINT IN WHOLE OR IN PART, OR TO DISCLOSE ANY OF THE INFORMATION TO OTHERS.		WEIGHT	SCALE	BROWN ADVANCE
		22.8Kg	NTS	5" SLEWING DRIVE
SYMBOLE ISO	SIZE A3	SHEET	1/1	SE5C-62M-RC
		THE TOLERANCE NOT MENTIONED IS REFERRED TO ISO 2768-vL,CASTING TOLERANCE ISO 8062-CT10		REV A

SLEWING DRIVES PERFORMANCE DATA

Model Code : SE5C-62M-RC

Slewing Drive Ratio	62:1
Rotating Output Rated Speed	–
Efficiency	30%
International Protection (IP)	55
Motor Temperature	–
Worm Drive Temperature	– 20℃ to + 120℃
Traceability	CEDS
Torsion Stiffness	252 Nm/mRad
Bending Stiffness	543Nm/mRad

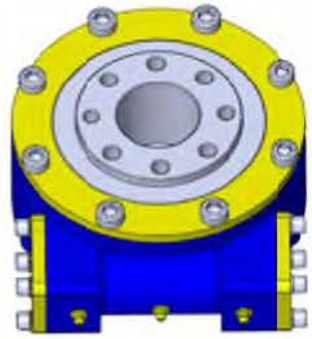

Slewing Drive Loading Data	HC Type				HQ Type			
Normal Output Torque(1 min.)	531	N·m	391	ft·lb	849	N·m	626	ft·lb
Max. Output Torque(3 sec.)	796	N·m	587	ft·lb	1,274	N·m	939	ft·lb
Backwards Holding Torque	4,700	N·m	3,467	ft·lb	4,700	N·m	3,467	ft·lb
Tilting Torque	5,011	N·m	3,696	ft·lb	5,011	N·m	3,696	ft·lb
Static Radial Rating	27.10	KN	6,092	lb	27.10	KN	6,092	lb
Static Axial Rating	67.90	kN	15,264	lb	67.90	kN	15,264	lb
Dynamic Radial Rating	14.00	KN	3,147	lb	14.00	KN	3,147	lb
Dynamic Axial Rating	16.45	kN	3,698	lb	16.45	kN	3,698	lb

DESIGNED BY			BROWN ADVANCE	
CHECKED BY				
APPROVED BY				
ALL PROPRIETARY RIGHTS IN THE SUBJECT MATTER HEREOF ARE RESERVED, AND NO PERMISSION IS GRANTED TO REPRODUCE THIS PRINT IN WHOLE OR IN PART, OR TO DISCLOSE ANY OF THE INFORMATION TO OTHERS.	WEIGHT	SCALE NTS	5" SLEWING DRIVE	
SYMBOLE ISO	SIZE A4	SHEET 1/1	SE5C-62M-RC	REV A

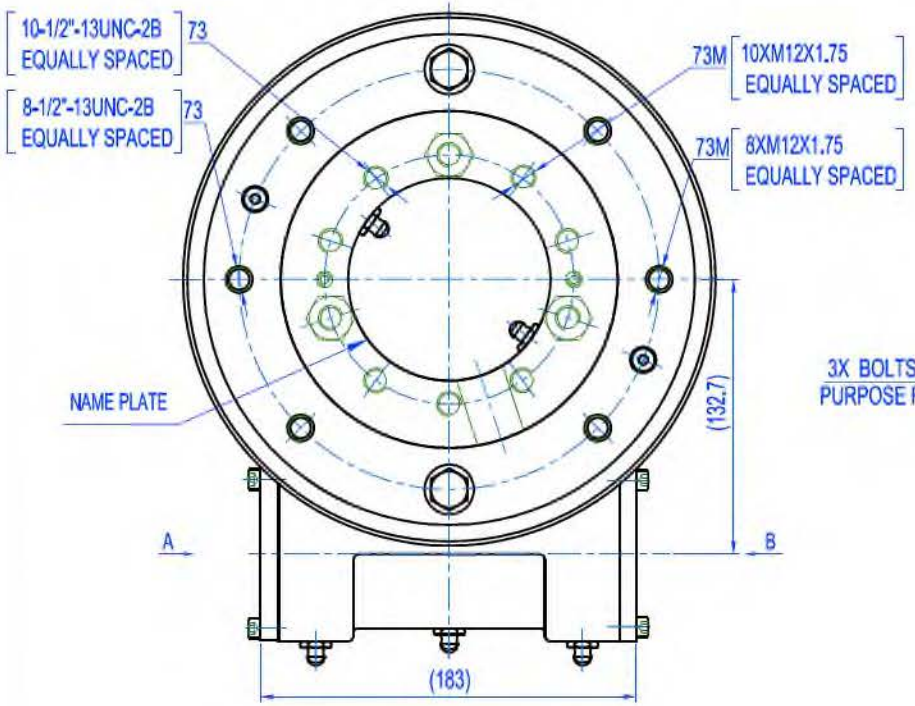

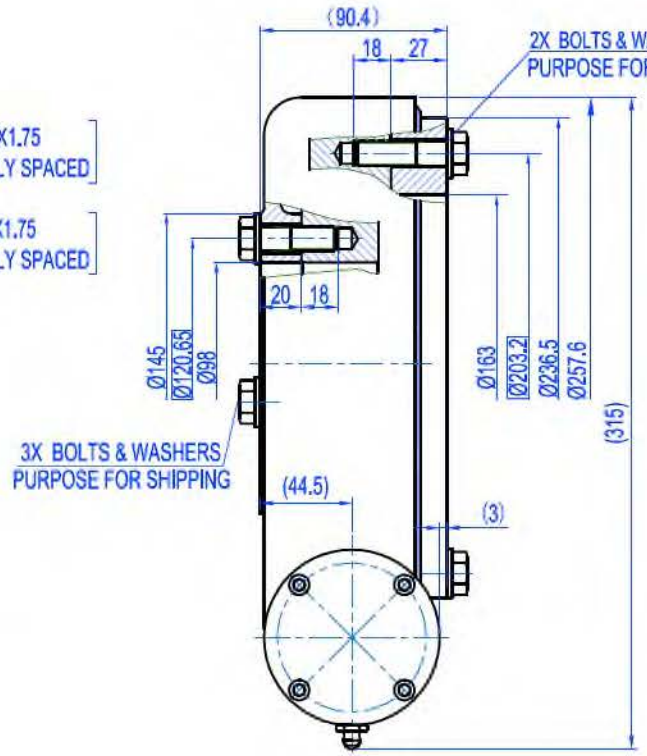

VIEW A

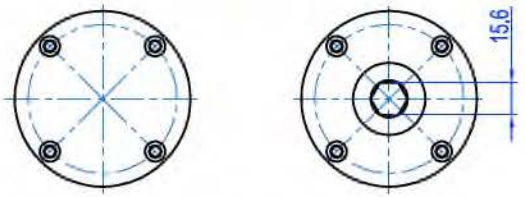

CAPPED END
(CODE "C")

HEX. WORM END
(NO CODE "C")

VIEW B

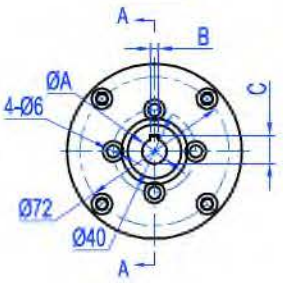

Section A-A

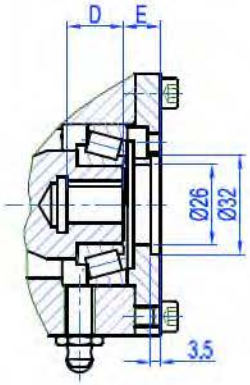

TYPE: 12M

UNIT: mm

TYPE	A	B	C	D	E
12M	$12^{+0.056}_{+0.015}$	$4^{+0.08}_{-0.02}$	$13.8^{+0.2}_{0}$	25.5	6.75

DESIGNED BY				BROWN ADVANCE
CHECKED BY				
APPROVED BY				
ALL PROPRIETARY RIGHTS IN THE SUBJECT MATTER HEREOF ARE RESERVED, AND NO PERMISSION IS GRANTED TO REPRODUCE THIS PRINT IN WHOLE OR IN PART, OR TO DISCLOSE ANY OF THE INFORMATION TO OTHERS.		WEIGHT	SCALE	7" SLEWING DRIVE
		21.3Kg	NTS	
SYMBOLE ISO	SIZE A3	SHEET	1/1	SE7C-73(M)-R(C) REV A
		THE TOLERANCE NOT MENTIONED IS REFERRED TO ISO 2768-mL,CASTING TOLERANCE ISO 8062-CT10		

SLEWING DRIVES PERFORMANCE DATA

Model Code : SE7C-73(M)-R(C)

Slewing Drive Ratio	73:1
Rotating Output Rated Speed	–
Efficiency	30%
International Protection (IP)	55
Motor Temperature	
Worm Drive Temperature	− 20℃ to + 120℃
Traceability	CEDS
Torsion Stiffness	762 Nm/mRad
Bending Stiffness	1083Nm/mRad

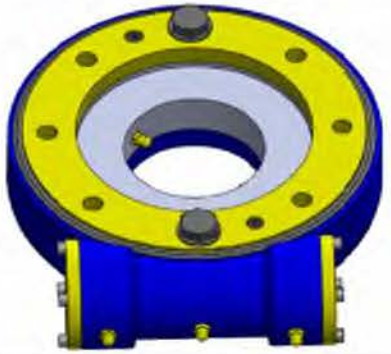

Slewing Drive Loading Data	HC Type				HB Type				HQ Type				HA Type			
Normal Output Torque	1,005	N·m	741	ft·lb	1,206	N·m	890	ft·lb	1,608	N·m	1,186	ft·lb	2,010	N·m	1,483	ft·lb
Max. Output Torque(3 sec.)	2,010	N·m	1,483	ft·lb	2,412	N·m	1,779	ft·lb	3,216	N·m	2,372	ft·lb	4,020	N·m	2,965	ft·lb
Backwards Holding Torque	10,338	N·m	7,625	ft·lb	10,338	N·m	7,625	ft·lb	10,338	N·m	7,625	ft·lb	10,338	N·m	7,625	ft·lb
Tilting Torque	13,556	N·m	9,999	ft·lb	13,556	N·m	9,999	ft·lb	13,556	N·m	9,999	ft·lb	13,556	N·m	9,999	ft·lb
Static Radial Rating	53.28	KN	11,977	lb	53.28	KN	11,977	lb	53.28	KN	11,977	lb	53.28	KN	11,977	lb
Static Axial Rating	133.20	kN	29,943	lb	133.20	kN	29,943	lb	133.20	kN	29,943	lb	133.20	kN	29,943	lb
Dynamic Radial Rating	27.91	KN	6,274	lb	27.91	KN	6,274	lb	27.91	KN	6,274	lb	27.91	KN	6,274	lb
Dynamic Axial Rating	31.90	kN	7,171	lb	31.90	kN	7,171	lb	31.90	kN	7,171	lb	31.90	kN	7,171	lb

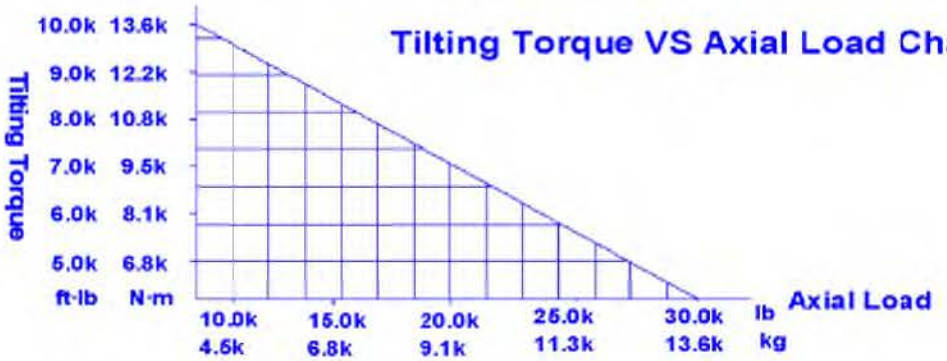

DESIGNED BY				BROWN ADVANCE	
CHECKED BY					
APPROVED BY					
ALL PROPRIETARY RIGHTS IN THE SUBJECT MATTER HEREOF ARE RESERVED, AND NO PERMISSION IS GRANTED TO REPRODUCE THIS PRINT IN WHOLE OR IN PART, OR TO DISCLOSE ANY OF THE INFORMATION TO OTHERS.		WEIGHT	SCALE NTS	7" SLEWING DRIVE	
SYMBOLE ISO	SIZE A4	SHEET	1/1	SE7C-73(M)-R(C)	REV A

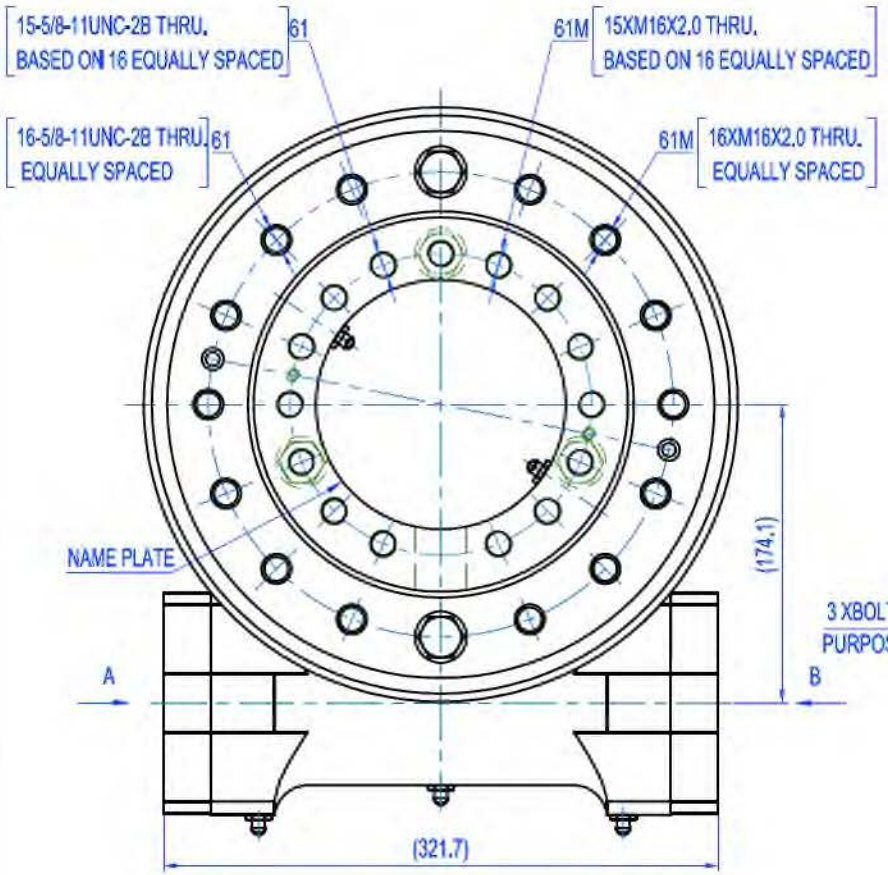

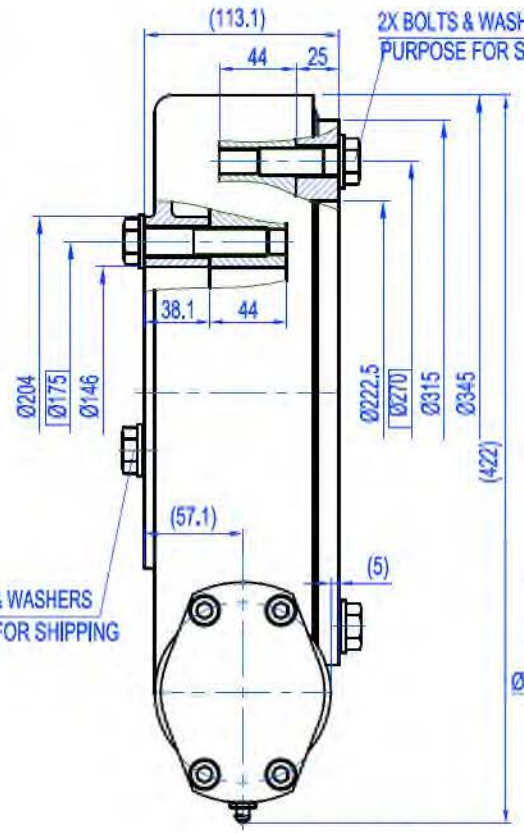

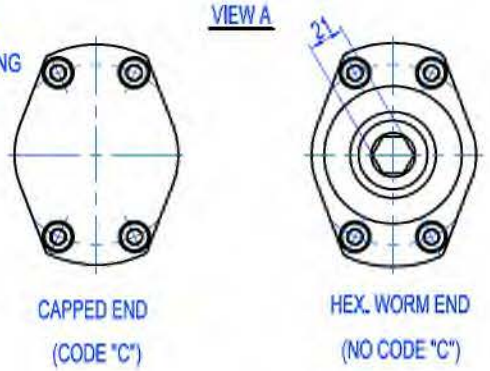

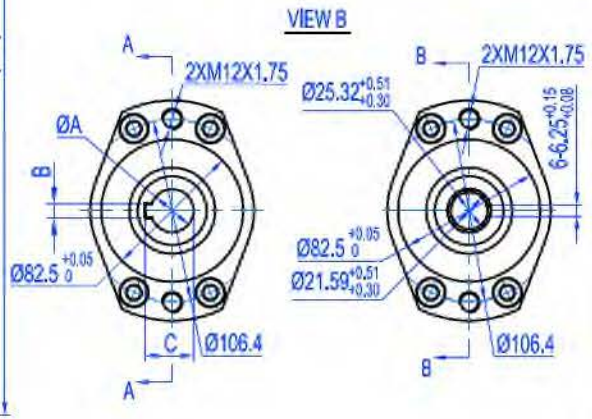

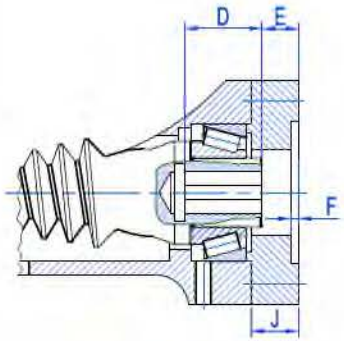

TYPE: 12M,20M,25M

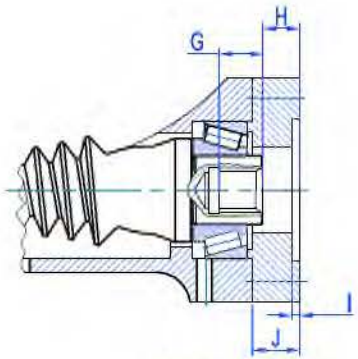

TYPE: B

UNIT: mm

TYPE	A	B	C	D	E	F	G	H	I	J
12M	12	4	13.8	23	-3	4,5				27.5
20M	20	6	22.8	30	12	4,5				27.5
25M	25	8	28.3	45	21,2	4,5				27.5
B							25.4	21.2	4.5	27.5

DESIGNED BY				BROWN ADVANCE	
CHECKED BY					
APPROVED BY					
ALL PROPRIETARY RIGHTS IN THE SUBJECT MATTER HEREOF ARE RESERVED, AND NO PERMISSION IS GRANTED TO REPRODUCE THIS PRINT IN WHOLE OR IN PART, OR TO DISCLOSE ANY OF THE INFORMATION TO OTHERS.		WEIGHT	SCALE	9" SLEWING DRIVE	
		48Kg	NTS		
SYMBOLE ISO	SIZE A3	SHEET	1/1	SE9C-61(M)-R(C)	REV A
		THE TOLERANCE NOT MENTIONED IS REFERRED TO ISO 2768-vL CASTING TOLERANCE ISO 8062-CT10			

SLEWING DRIVES PERFORMANCE DATA

Model Code : SE9C-61(M)-R(C)

Slewing Drive Ratio	61:1
Rotating Output Rated Speed	–
Efficiency	43%
International Protection (IP)	55
Motor Temperature	–
Worm Drive Temperature	−20℃ to+120℃
Traceability	CEDS
Torsion Stiffness	1,444Nm/mRad
Bending Stiffness	1,701Nm/mRad

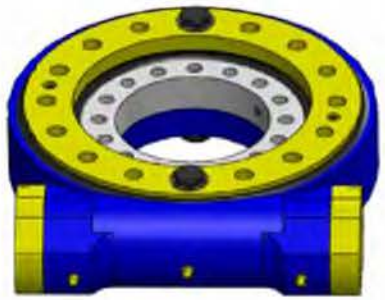

Slewing Drive Loading Data	HC Type				HB Type				HQ Type				HA Type			
Normal Output Torque	2,240	N·m	1,652	ft·lb	2,688	N·m	1,983	ft·lb	3,584	N·m	2,644	ft·lb	4,480	N·m	3,304	ft·lb
Max. Output Torque(3 sec.)	4,480	N·m	3,304	ft·lb	5,376	N·m	3,965	ft·lb	7,168	N·m	5,287	ft·lb	8,960	N·m	6,609	ft·lb
Backwards Holding Torque	38,710	N·m	28,552	ft·lb	38,710	N·m	28,552	ft·lb	38,710	N·m	28,552	ft·lb	38,710	N·m	28,552	ft·lb
Tilting Torque	33,900	N·m	25,005	ft·lb	33,900	N·m	25,005	ft·lb	33,900	N·m	25,005	ft·lb	33,900	N·m	25,005	ft·lb
Static Radial Rating	134.98	KN	30,344	lb	134.98	KN	30,344	lb	134.98	KN	30,344	lb	134.98	KN	30,344	lb
Static Axial Rating	337.44	kN	75,857	lb	337.44	kN	75,857	lb	337.44	kN	75,857	lb	337.44	kN	75,857	lb
Dynamic Radial Rating	70.86	KN	15,929	lb	70.86	KN	15,929	lb	70.86	KN	15,929	lb	70.86	KN	15,929	lb
Dynamic Axial Rating	80.99	kN	18,207	lb	80.99	kN	18,207	lb	80.99	kN	18,207	lb	80.99	kN	18,207	lb

DESIGNED BY				BROWN ADVANCE	
CHECKED BY					
APPROVED BY					
ALL PROPRIETARY RIGHTS IN THE SUBJECT MATTER HEREOF ARE RESERVED, AND NO PERMISSION IS GRANTED TO REPRODUCE THIS PRINT IN WHOLE OR IN PART, OR TO DISCLOSE ANY OF THE INFORMATION TO OTHERS.		WEIGHT	SCALE NTS	9" SLEWING DRIVE	
SYMBOLE ISO	SIZE A4	SHEET 1/1		SE9C-61(M)-R(C)	REV A

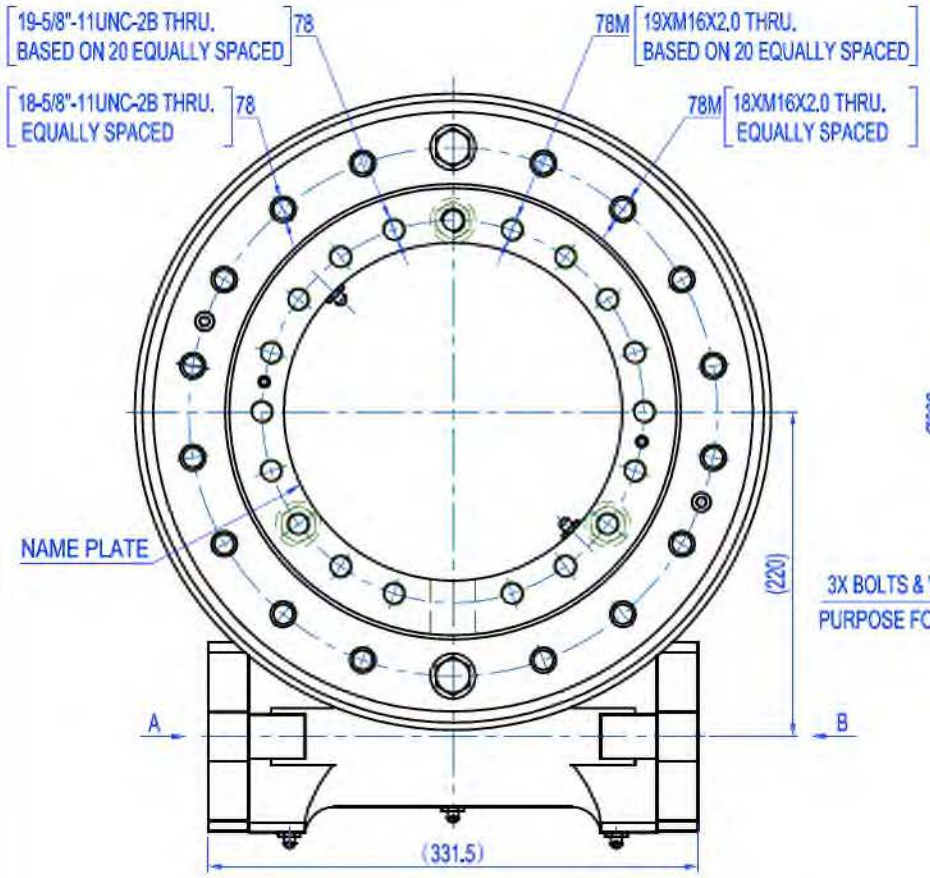

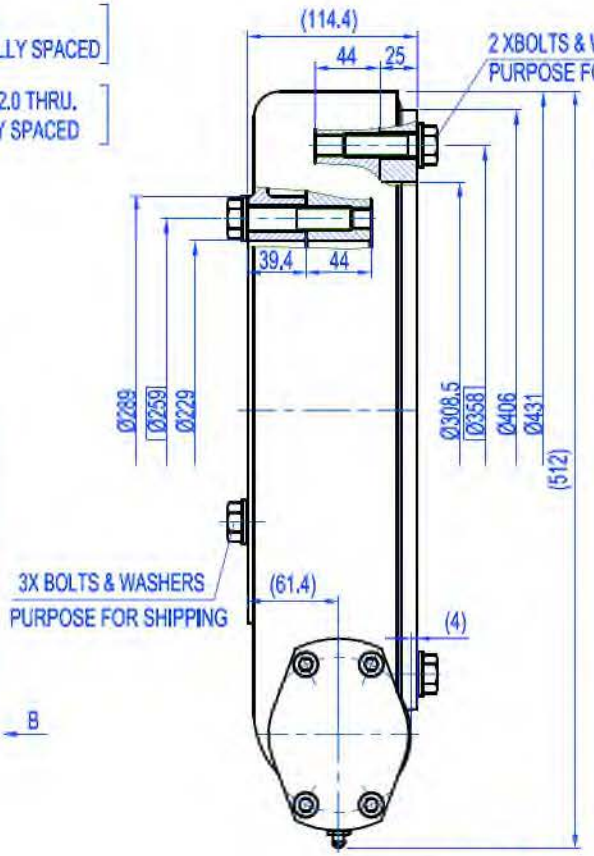

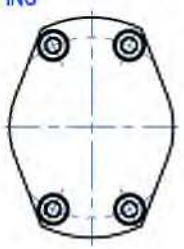

CAPPED END
(CODE "C")

VIEW A

HEX. WORM END
(NO CODE "C")

VIEW B

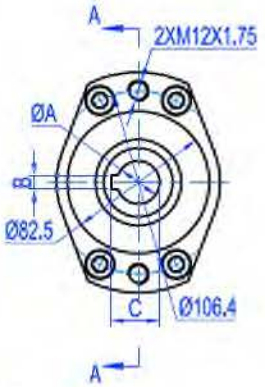

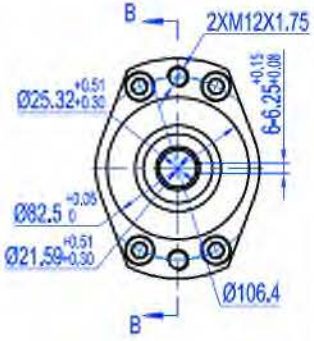

UNIT: mm

TYPE	A	B	C	D	E	F	G	H	I	J
12M	12	4	13.8	23	-3	4,5				27,5
20M	20	6	22.8	30	12	4,5				27,5
25M	25	6	28.3	45	21,2	4,5				27,5
B							25,4	21,2	4,5	27,5

Section A-A

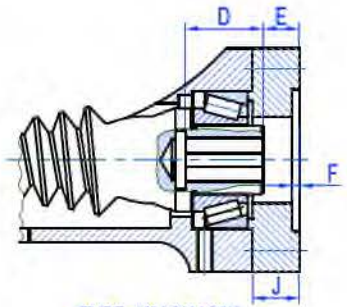

TYPE: 12M,20M,25M

Section B-B

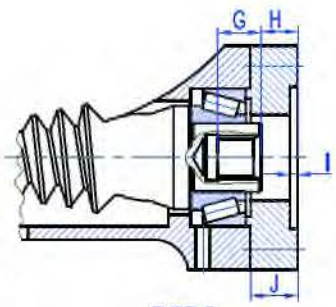

TYPE: B

DESIGNED BY				BROWN ADVANCE
CHECKED BY				
APPROVED BY				
ALL PROPRIETARY RIGHTS IN THE SUBJECT MATTER HEREOF ARE RESERVED, AND NO PERMISSION IS GRANTED TO REPRODUCE THIS PRINT IN WHOLE OR IN PART, OR TO DISCLOSE ANY OF THE INFORMATION TO OTHERS.		WEIGHT	SCALE	12" SLEWING DRIVE
		50Kg	NTS	
SYMBOLE ISO	SIZE A3	SHEET	1/1	SE12C-78(M)-R(C) REV A
		THE TOLERANCE NOT MENTIONED IS REFERRED TO ISO 2768-mL CASTING TOLERANCE ISO 8062-CT10		

SLEWING DRIVES PERFORMANCE DATA

Model Code : SE12C-78(M)-R(C)

Slewing Drive Ratio	78:1
Rotating Output Rated Speed	–
Efficiency	43%
International Protection (IP)	55
Motor Temperature	–
Worm Drive Temperature	– 20℃ to + 120℃
Traceability	CEDS
Torsion Stiffness	1,925Nm/mRad
Bending Stiffness	2,218Nm/mRad

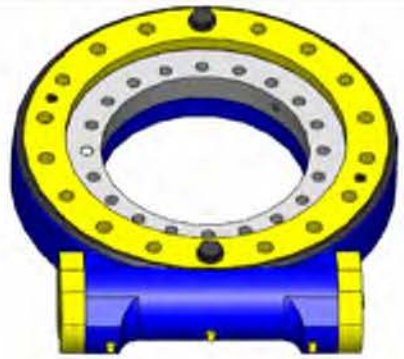

Slewing Drive Loading Data	HC Type				HB Type				HQ Type				HA Type			
Normal Output Torque	2,898	N·m	2,137	ft·lb	3,477	N·m	2,565	ft·lb	4,636	N·m	3,420	ft·lb	5,795	N·m	4,274	ft·lb
Max. Output Torque(3 sec.)	5,795	N·m	4,274	ft·lb	6,954	N·m	5,129	ft·lb	9,272	N·m	6,839	ft·lb	11,590	N·m	8,549	ft·lb
Backwards Holding Torque	43,000	N·m	31,717	ft·lb	43,000	N·m	31,717	ft·lb	43,000	N·m	31,717	ft·lb	43,000	N·m	31,717	ft·lb
Tilting Torque	54,240	N·m	40,007	ft·lb	54,240	N·m	40,007	ft·lb	54,240	N·m	40,007	ft·lb	54,240	N·m	40,007	ft·lb
Static Radial Rating	190.30	KN	42,779	lb	190.30	KN	42,779	lb	190.30	KN	42,779	lb	190.30	KN	42,779	lb
Static Axial Rating	475.08	kN	106,798	lb	475.08	kN	106,798	lb	475.08	kN	106,798	lb	475.08	kN	106,798	lb
Dynamic Radial Rating	99.77	KN	22,428	lb	99.77	KN	22,428	lb	99.77	KN	22,428	lb	99.77	KN	22,428	lb
Dynamic Axial Rating	114.02	kN	25,632	lb	114.02	kN	25,632	lb	114.02	kN	25,632	lb	114.02	kN	25,632	lb

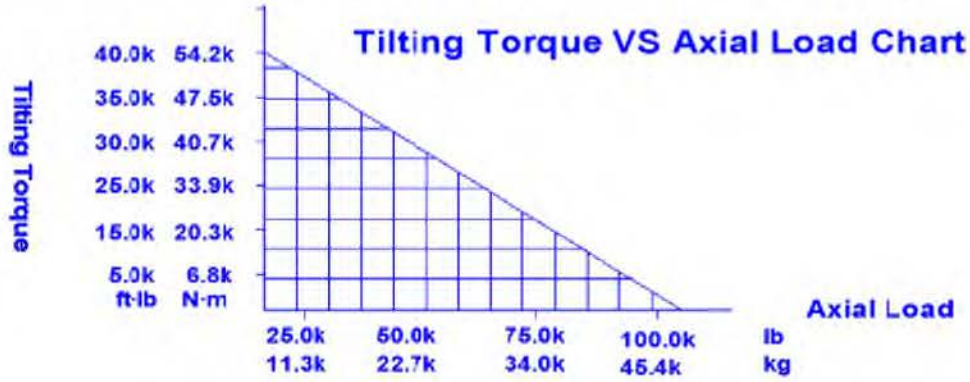

DESIGNED BY				BROWN ADVANCE
CHECKED BY				
APPROVED BY				
ALL PROPRIETARY RIGHTS IN THE SUBJECT MATTER HEREOF ARE RESERVED, AND NO PERMISSION IS GRANTED TO REPRODUCE THIS PRINT IN WHOLE OR IN PART, OR TO DISCLOSE ANY OF THE INFORMATION TO OTHERS.		WEIGHT	SCALE NTS	12" SLEWING DRIVE
SYMBOLE ISO	SIZE A4	SHEET 1/1		SE12C-78(M)-R(C) REV A

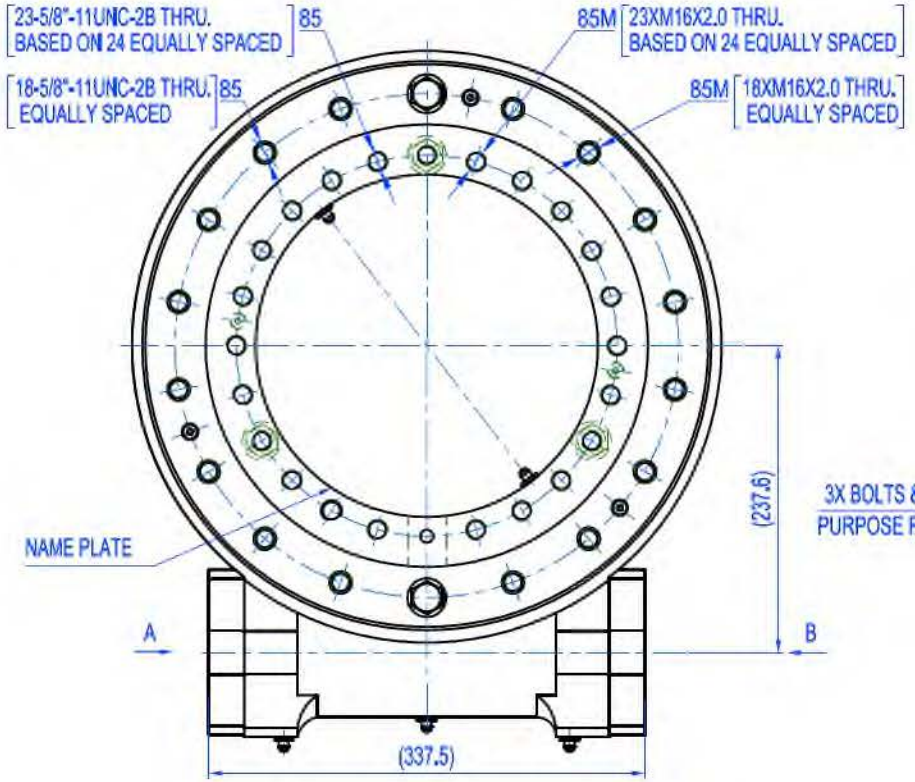

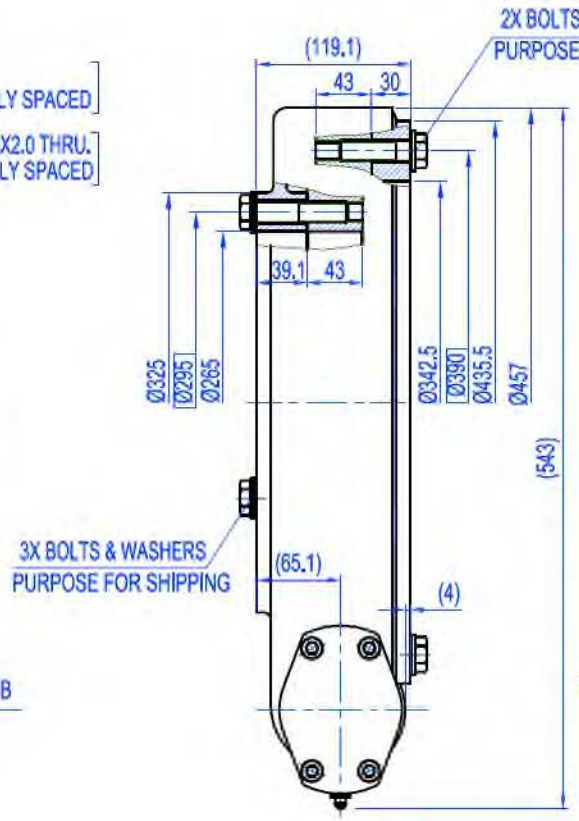

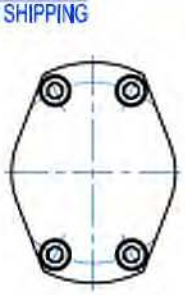

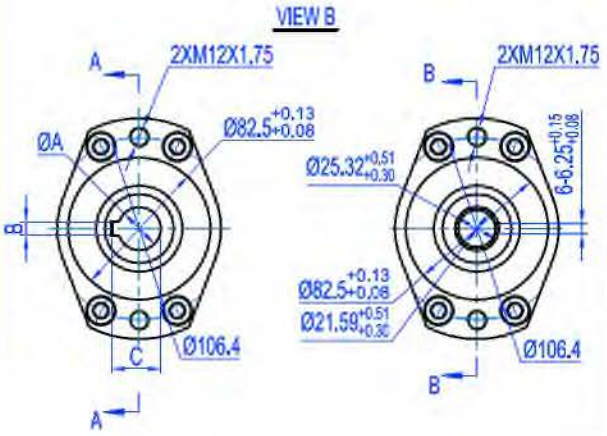

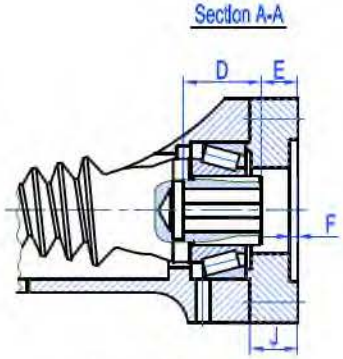

TYPE: 12M,20M,25M

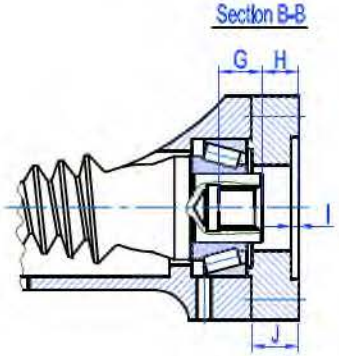

TYPE: B

UNIT: mm

TYPE	A	B	C	D	E	F	G	H	I	J
12M	12	4	13.8	23	-3	4,5				27.5
20M	20	6	22.3	30	12	4,5				27.5
25M	25	8	28.3	45	21.2	4,5				27.5
B							25,4	25	4,5	27.5

DESIGNED BY				
CHECKED BY				
APPROVED BY				
ALL PROPRIETARY RIGHTS IN THE SUBJECT MATTER HEREOF ARE RESERVED, AND NO PERMISSION IS GRANTED TO REPRODUCE THIS PRINT IN WHOLE OR IN PART, OR TO DISCLOSE ANY OF THE INFORMATION TO OTHERS.		WEIGHT	SCALE	14" SLEWING DRIVE
		55Kg	NTS	
SYMBOLE ISO	SIZE A3	SHEET	1/1	SE14C-85(M)-R(C) REV A
		THE TOLERANCE NOT MENTIONED IS REFERRED TO ISO 2768—vL,CASTING TOLERANCE ISO 8062—CT10		

SLEWING DRIVES PERFORMANCE DATA

Model Code : SE14C-85(M)-R(C)

Slewing Drive Ratio	85:1
Rotating Output Rated Speed	–
Efficiency	43%
International Protection (IP)	55
Motor Temperature	–
Worm Drive Temperature	— 20℃ to + 120℃
Traceability	CEDS
Torsion Stiffness	2,240Nm/mRad
Bending Stiffness	2,645Nm/mRad

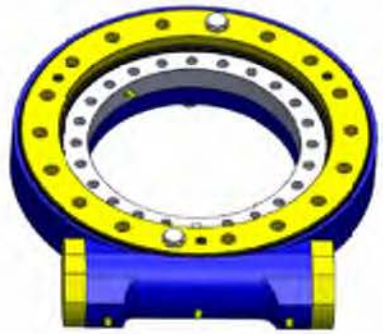

Slewing Drive Loading Data	HC Type				HB Type				HQ Type				HA Type			
Normal Output Torque	3,249	N·m	2,396	ft·lb	3,898	N·m	2,875	ft·lb	5,198	N·m	3,834	ft·lb	6,497	N·m	4,792	ft·lb
Max. Output Torque(3 sec.)	6,497	N·m	4,792	ft·lb	7,796	N·m	5,751	ft·lb	10,395	N·m	7,667	ft·lb	12,994	N·m	9,584	ft·lb
Backwards Holding Torque	48,000	N·m	35,405	ft·lb	48,000	N·m	35,405	ft·lb	48,000	N·m	35,405	ft·lb	48,000	N·m	35,405	ft·lb
Overturning Moment	67,800	N·m	50,009	ft·lb	67,800	N·m	50,009	ft·lb	67,800	N·m	50,009	ft·lb	67,800	N·m	50,009	ft·lb
Static Radial Rating	222.00	KN	49,906	lb	222.00	KN	49,906	lb	222.00	KN	49,906	lb	222.00	KN	49,906	lb
Static Axial Rating	555.00	kN	124,764	lb	555.00	kN	124,764	lb	555.00	kN	124,764	lb	555.00	kN	124,764	lb
Dynamic Radial Rating	116.55	KN	26,200	lb	116.55	KN	26,200	lb	116.55	KN	26,200	lb	116.55	KN	26,200	lb
Dynamic Axial Rating	133.20	kN	29,943	lb	133.20	kN	29,943	lb	133.20	kN	29,943	lb	133.20	kN	29,943	lb

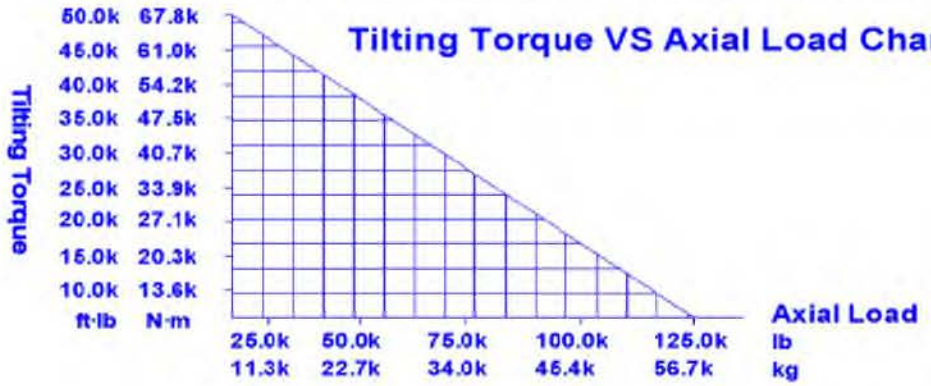

DESIGNED BY				BROWN ADVANCE	
CHECKED BY					
APPROVED BY					
ALL PROPRIETARY RIGHTS IN THE SUBJECT MATTER HEREOF ARE RESERVED, AND NO PERMISSION IS GRANTED TO REPRODUCE THIS PRINT IN WHOLE OR IN PART, OR TO DISCLOSE ANY OF THE INFORMATION TO OTHERS.		WEIGHT	SCALE	14" SLEWING DRIVE	
			NTS		
SYMBOLE ISO	SIZE A4	SHEET	1/1	SE14C-85(M)-R(C)	REV A

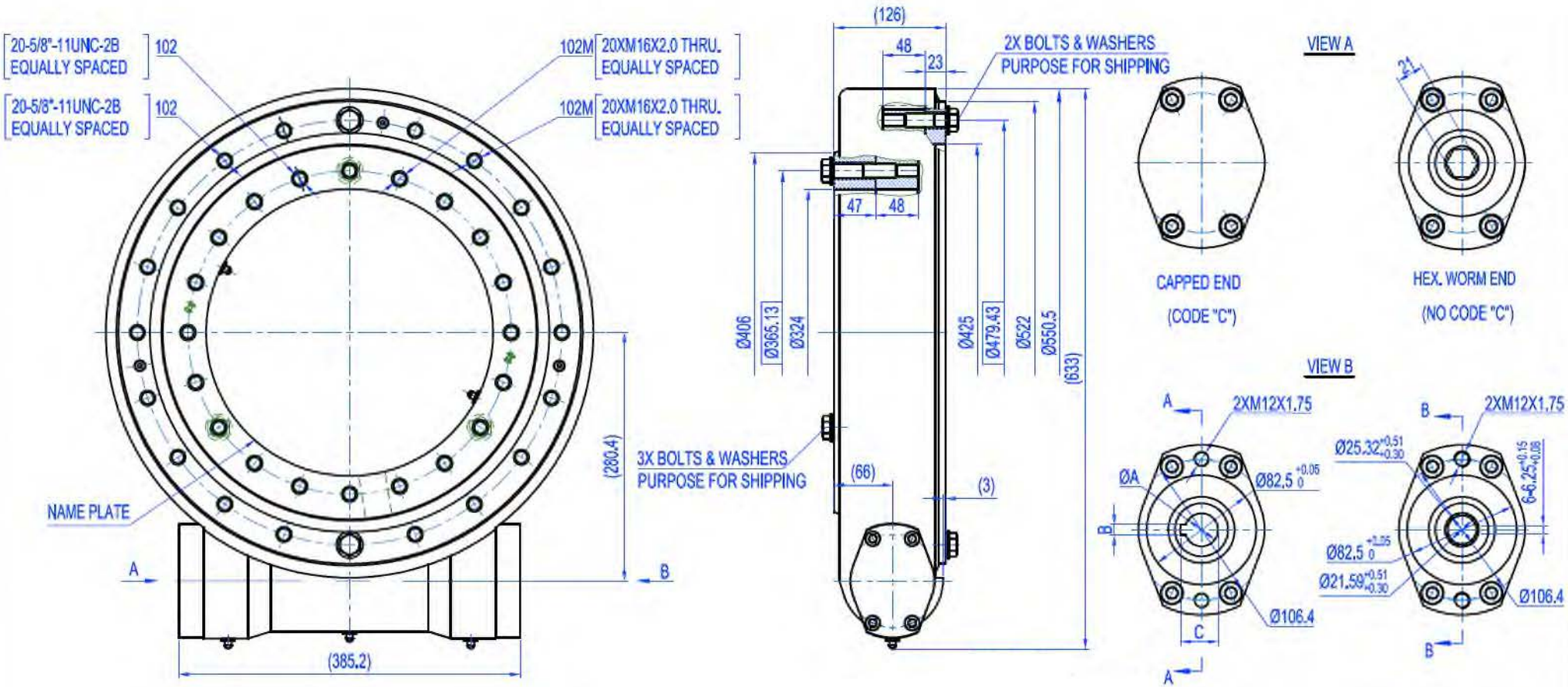

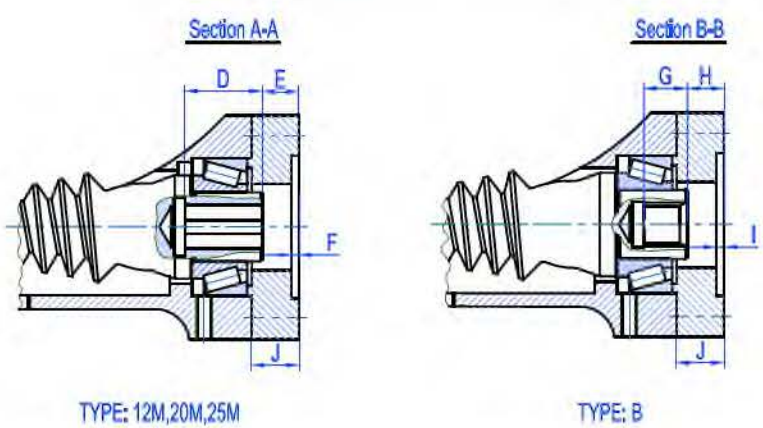

UNIT: mm

TYPE	A	B	C	D	E	F	G	H	I	J
12M	12 [illegible]	4 [illegible]	13.8 [illegible]	23	-3	4.5				27.5
20M	20 [illegible]	6 [illegible]	22.8 [illegible]	30	12	4.5				27.5
25M	25 [illegible]	8 [illegible]	28.3 [illegible]	45	21.2	4.5				27.5
B							28.6	24.8	4.5	27.5

DESIGNED BY				BROWN ADVANCE
CHECKED BY				
APPROVED BY				
ALL PROPRIETARY RIGHTS IN THE SUBJECT MATTER HEREOF ARE RESERVED, AND NO PERMISSION IS GRANTED TO REPRODUCE THIS PRINT IN WHOLE OR IN PART, OR TO DISCLOSE ANY OF THE INFORMATION TO OTHERS.	WEIGHT	SCALE	17" SLEWING DRIVE	
	96Kg	NTS		
SYMBOLE ISO	SIZE A3	SHEET 1/1	SE17D-102(M)-R(C)	REV A
	THE TOLERANCE NOT MENTIONED IS REFERRED TO ISO 2768-vL,CASTING TOLERANCE ISO 8062-CT10			

SLEWING DRIVES PERFORMANCE DATA

Model Code : SE17D-102(M)-R(C)

Slewing Drive Ratio	102:1
Rotating Output Rated Speed	–
Efficiency	43%
International Protection (IP)	55
Motor Temperature	–
Worm Drive Temperature	— 20℃ to — 120℃
Traceability	CEDS
Torsion Stiffness	2,734Nm/mRad
Bending Stiffness	3,212Nm/mRad

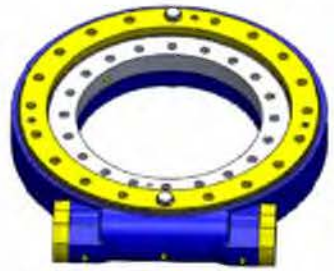

Slewing Drive Loading Data	HC Type				HB Type				HQ Type				HA Type			
Normal Output Torque	4,680	N·m	3,452	ft·lb	5,616	N·m	4,142	ft·lb	7,488	N·m	5,523	ft·lb	9,360	N·m	6,904	ft·lb
Max. Output Torque(3 sec.)	9,360	N·m	6,904	ft·lb	11,232	N·m	8,285	ft·lb	14,976	N·m	11,046	ft·lb	18,720	N·m	13,808	ft·lb
Backwards Holding Torque	72,290	N·m	53,321	ft·lb	72,290	N·m	53,321	ft·lb	72,290	N·m	53,321	ft·lb	72,290	N·m	53,321	ft·lb
Tilting Torque	135,600	N·m	100,019	ft·lb	135,600	N·m	100,019	ft·lb	135,600	N·m	100,019	ft·lb	135,600	N·m	100,019	ft·lb
Static Radial Rating	390.72	KN	87,834	lb	390.72	KN	87,834	lb	390.72	KN	87,834	lb	390.72	KN	87,834	lb
Static Axial Rating	976.81	kN	219,587	lb	976.81	kN	219,587	lb	976.81	kN	219,587	lb	976.81	kN	219,587	lb
Dynamic Radial Rating	205.13	KN	46,113	lb	205.13	KN	46,113	lb	205.13	KN	46,113	lb	205.13	KN	46,113	lb
Dynamic Axial Rating	234.43	kN	52,700	lb	234.43	kN	52,700	lb	234.43	kN	52,700	lb	234.43	kN	52,700	lb

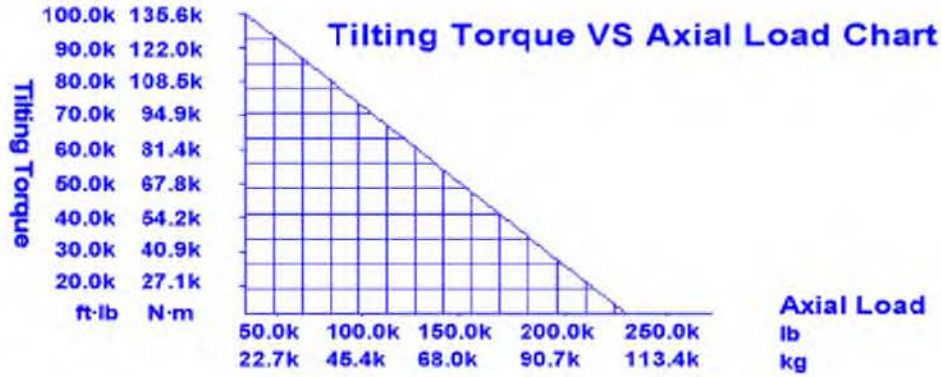

DESIGNED BY				BROWN ADVANCE	
CHECKED BY					
APPROVED BY					
ALL PROPRIETARY RIGHTS IN THE SUBJECT MATTER HEREOF ARE RESERVED, AND NO PERMISSION IS GRANTED TO REPRODUCE THIS PRINT IN WHOLE OR IN PART, OR TO DISCLOSE ANY OF THE INFORMATION TO OTHERS.		WEIGHT	SCALE NTS	17" SLEWING DRIVE	
SYMBOLE ISO	SIZE A4	SHEET	1/1	SE17D-102(M)-R(C)	REV A

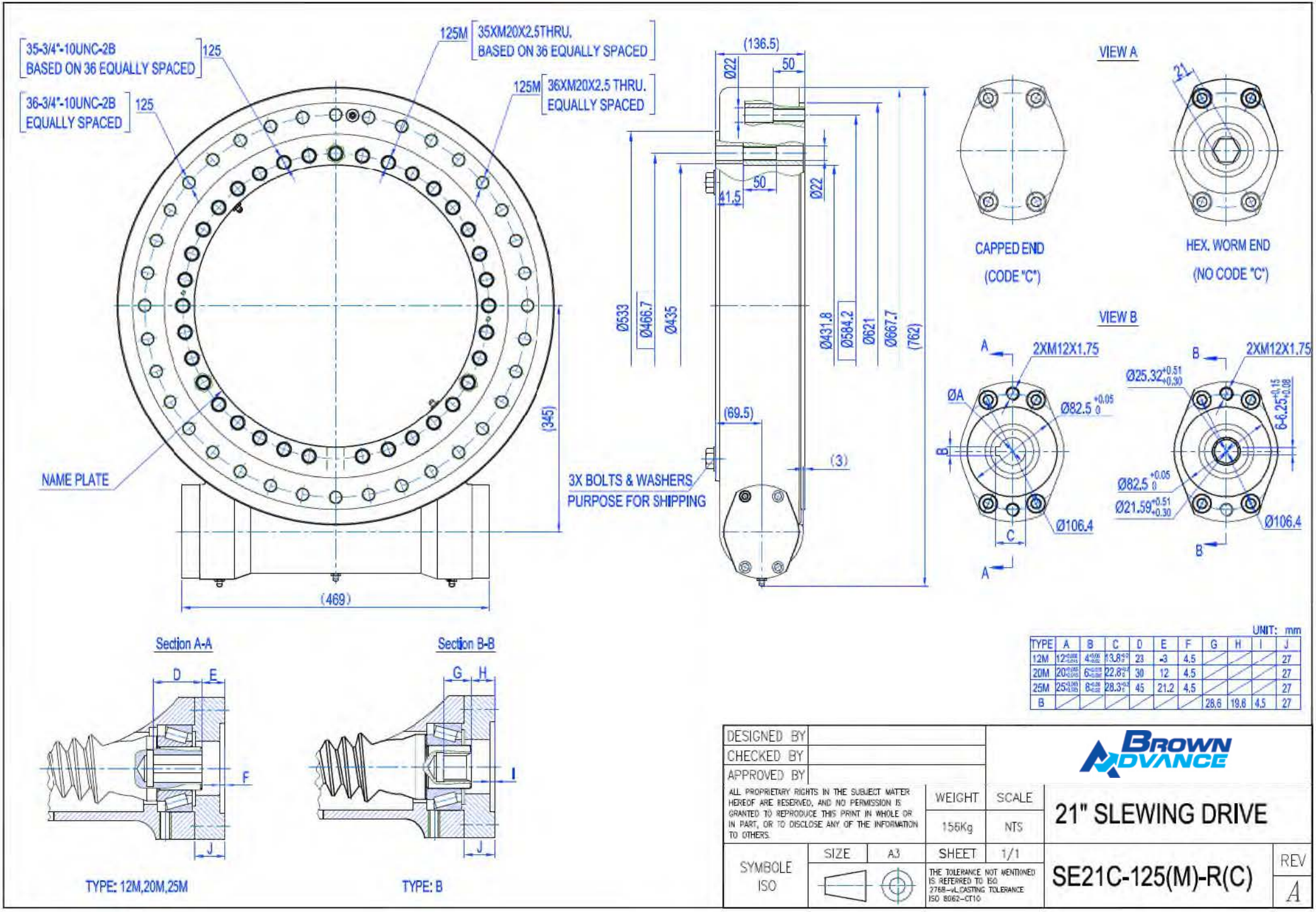

UNIT: mm

TYPE	A	B	C	D	E	F	G	H	I	J
12M	12 +0.008 +0.014	4 +0.005 +0.02	13.8 +0.3 0	23	-3	4.5				27
20M	20 +0.065 +0.015	6 +0.008 +0.038	22.8 +0.3 0	30	12	4.5				27
25M	25 +0.065 +0.035	8 +0.08 +0.038	28.3 +0.3 0	45	21.2	4.5				27
B							28.6	19.8	4.5	27

DESIGNED BY				
CHECKED BY				
APPROVED BY				
ALL PROPRIETARY RIGHTS IN THE SUBJECT MATTER HEREOF ARE RESERVED, AND NO PERMISSION IS GRANTED TO REPRODUCE THIS PRINT IN WHOLE OR IN PART, OR TO DISCLOSE ANY OF THE INFORMATION TO OTHERS.	WEIGHT	SCALE	BROWN ADVANCE	
	156Kg	NTS	21" SLEWING DRIVE	
SYMBOLE ISO	SIZE A3	SHEET 1/1	SE21C-125(M)-R(C)	REV A
	THE TOLERANCE NOT MENTIONED IS REFERRED TO ISO 2768-vL CASTING TOLERANCE ISO 8062-CT10			

SLEWING DRIVES PERFORMANCE DATA

Model Code : SE21C-125(M)-R(C)

Slewing Drive Ratio	125:1
Rotating Output Rated Speed	–
Efficiency	43%
International Protection (IP)	55
Motor Temperature	–
Worm Drive Temperature	– 20℃ to + 120℃
Traceability	CEDS
Torsion Stiffness	3363Nm/mRad
Bending Stiffness	3967Nm/mRad

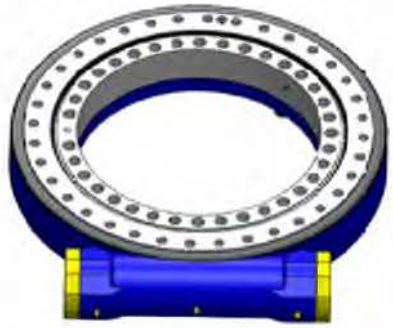

Slewing Drive Loading Data	HC Type				HB Type				HQ Type				HA Type			
Normal Output Torque	8,005	N·m	5,904	ft·lb	9,606	N·m	7,085	ft·lb	12,808	N·m	9,447	ft·lb	16,010	N·m	11,809	ft·lb
Max. Output Torque(3 sec.)	16,010	N·m	11,809	ft·lb	19,212	N·m	14,171	ft·lb	25,616	N·m	18,894	ft·lb	32,020	N·m	23,618	ft·lb
Backwards Holding Torque	105,780	N·m	78,023	ft·lb	105,780	N·m	78,023	ft·lb	105,780	N·m	78,023	ft·lb	105,780	N·m	78,023	ft·lb
Tilting Torque	203,400	N·m	150,028	ft·lb	203,400	N·m	150,028	ft·lb	203,400	N·m	150,028	ft·lb	203,400	N·m	150,028	ft·lb
Static Radial Rating	639.38	KN	143,733	lb	639.38	KN	143,733	lb	639.38	KN	143,733	lb	639.38	KN	143,733	lb
Static Axial Rating	1,698.45	kN	359,332	lb	1,698.45	kN	359,332	lb	1,698.45	kN	359,332	lb	1,698.45	kN	359,332	lb
Dynamic Radial Rating	335.67	KN	75,459	lb	335.67	KN	75,459	lb	335.67	KN	75,459	lb	335.67	KN	75,459	lb
Dynamic Axial Rating	383.63	kN	86,240	lb	383.63	kN	86,240	lb	383.63	kN	86,240	lb	383.63	kN	86,240	lb

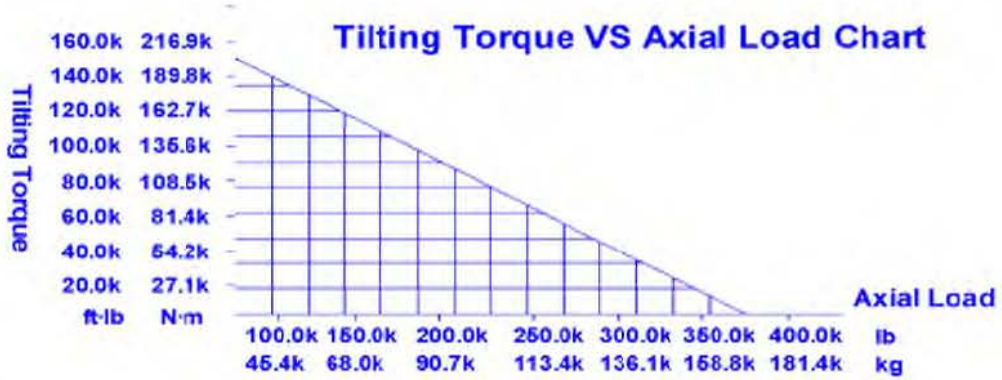

DESIGNED BY				BROWN ADVANCE	
CHECKED BY					
APPROVED BY					
ALL PROPRIETARY RIGHTS IN THE SUBJECT MATTER HEREOF ARE RESERVED, AND NO PERMISSION IS GRANTED TO REPRODUCE THIS PRINT IN WHOLE OR IN PART, OR TO DISCLOSE ANY OF THE INFORMATION TO OTHERS.		WEIGHT	SCALE NTS	21" SLEWING DRIVE	
SYMBOLE ISO	SIZE A4	SHEET 1/1		SE21C-125(M)-R(C)	REV A

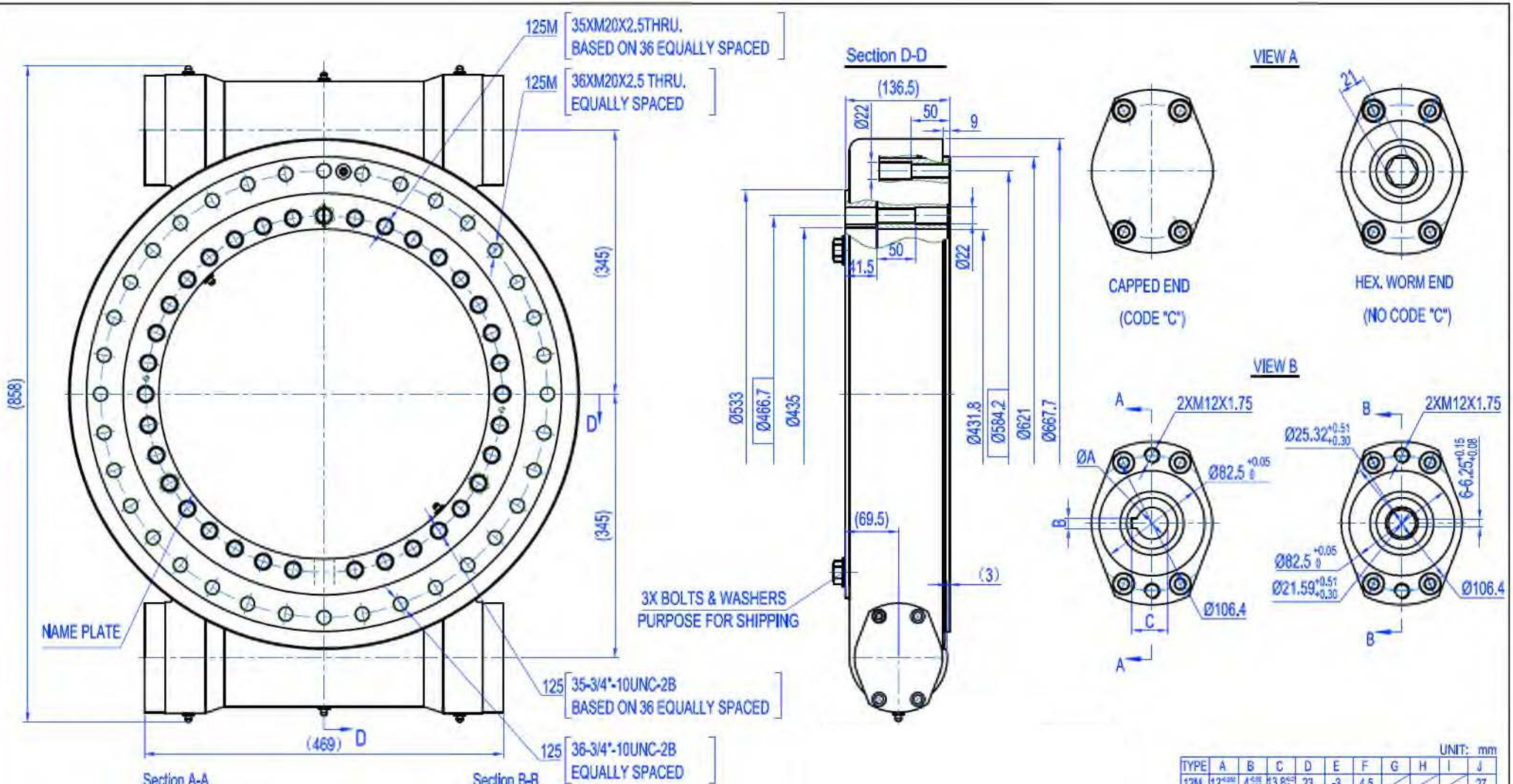

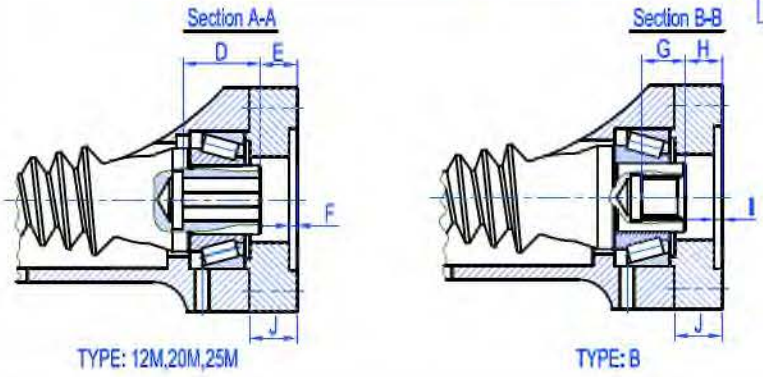

UNIT: mm

TYPE	A	B	C	D	E	F	G	H	I	J
12M	12 [illegible]	4 [illegible]	13.8 [illegible]	23	-3	4.5				27
20M	20 [illegible]	6 [illegible]	22.8 [illegible]	30	12	4.5				27
25M	25 [illegible]	8 [illegible]	28.3 [illegible]	45	21.2	4.5				27
B							28.6	19.6	4.5	27

DESIGNED BY				BROWN ADVANCE
CHECKED BY				
APPROVED BY				
ALL PROPRIETARY RIGHTS IN THE SUBJECT MATTER HEREOF ARE RESERVED, AND NO PERMISSION IS GRANTED TO REPRODUCE THIS PRINT IN WHOLE OR IN PART, OR TO DISCLOSE ANY OF THE INFORMATION TO OTHERS.	WEIGHT	SCALE	21" SLEWING DRIVE	
	213.6Kg	NTS		
SYMBOLE ISO	SIZE A3	SHEET 1/1	SE21C-125(M)-R(C)-2	REV A
	THE TOLERANCE NOT MENTIONED IS REFERRED TO ISO 2768-vL,CASTING TOLERANCE ISO 8062-CT10			

SLEWING DRIVES PERFORMANCE DATA

Model Code : SE21C-125(M)-R(C)-2

Slewing Drive Ratio	125:1
Rotating Output Rated Speed	–
Efficiency	43%
International Protection (IP)	55
Motor Temperature	–
Worm Drive Temperature	– 20℃ to + 120℃
Traceability	CEDS
Torsion Stiffness	3,363Nm/mRad
Bending Stiffness	3,967Nm/mRad

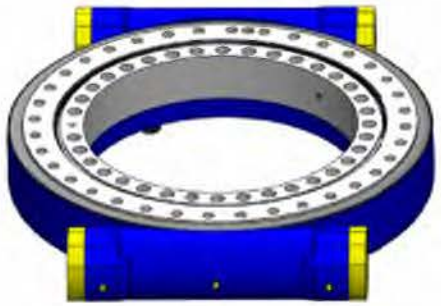

Slewing Drive Loading Data	HC Type				HB Type				HQ Type				HA Type			
Normal Output Torque	12,008	N·m	8,857	ft·lb	14,409	N·m	10,628	ft·lb	19,212	N·m	14,171	ft·lb	24,015	N·m	17,713	ft·lb
Max. Output Torque(3sec.)	24,015	N·m	17,713	ft·lb	28,818	N·m	21,256	ft·lb	38,424	N·m	28,342	ft·lb	48,030	N·m	35,427	ft·lb
Backwards Holding Torque	211,560	N·m	156,047	ft·lb	211,560	N·m	156,047	ft·lb	211,560	N·m	156,047	ft·lb	211,560	N·m	156,047	ft·lb
Overturning Moment	203,400	N·m	150,028	ft·lb	203,400	N·m	150,028	ft·lb	203,400	N·m	150,028	ft·lb	203,400	N·m	150,028	ft·lb
Static Radial Rating	639.38	KN	143,733	lb	639.38	KN	143,733	lb	639.38	KN	143,733	lb	639.38	KN	143,733	lb
Static Axial Rating	1,598.45	kN	359,332	lb	1,598.45	kN	359,332	lb	1,598.45	kN	359,332	lb	1,598.45	kN	359,332	lb
Dynamic Radial Rating	335.67	KN	75,459	lb	335.67	KN	75,459	lb	335.67	KN	75,459	lb	335.67	KN	75,459	lb
Dynamic Axial Rating	383.63	kN	86,240	lb	383.63	kN	86,240	lb	383.63	kN	86,240	lb	383.63	kN	86,240	lb

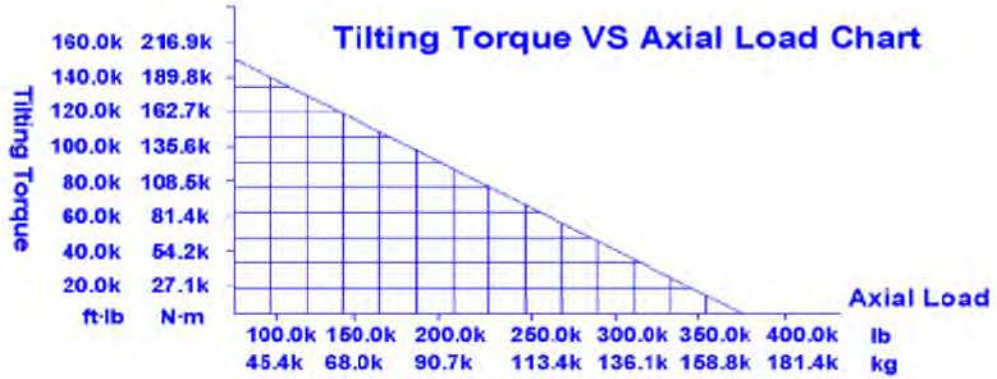

DESIGNED BY				BROWN ADVANCE	
CHECKED BY					
APPROVED BY					
ALL PROPRIETARY RIGHTS IN THE SUBJECT MATTER HEREOF ARE RESERVED, AND NO PERMISSION IS GRANTED TO REPRODUCE THIS PRINT IN WHOLE OR IN PART, OR TO DISCLOSE ANY OF THE INFORMATION TO OTHERS.		WEIGHT	SCALE NTS	21" SLEWING DRIVE	
SYMBOLE ISO	SIZE A4	SHEET	1/1	SE21C-125(M)-R(C)-2	REV A

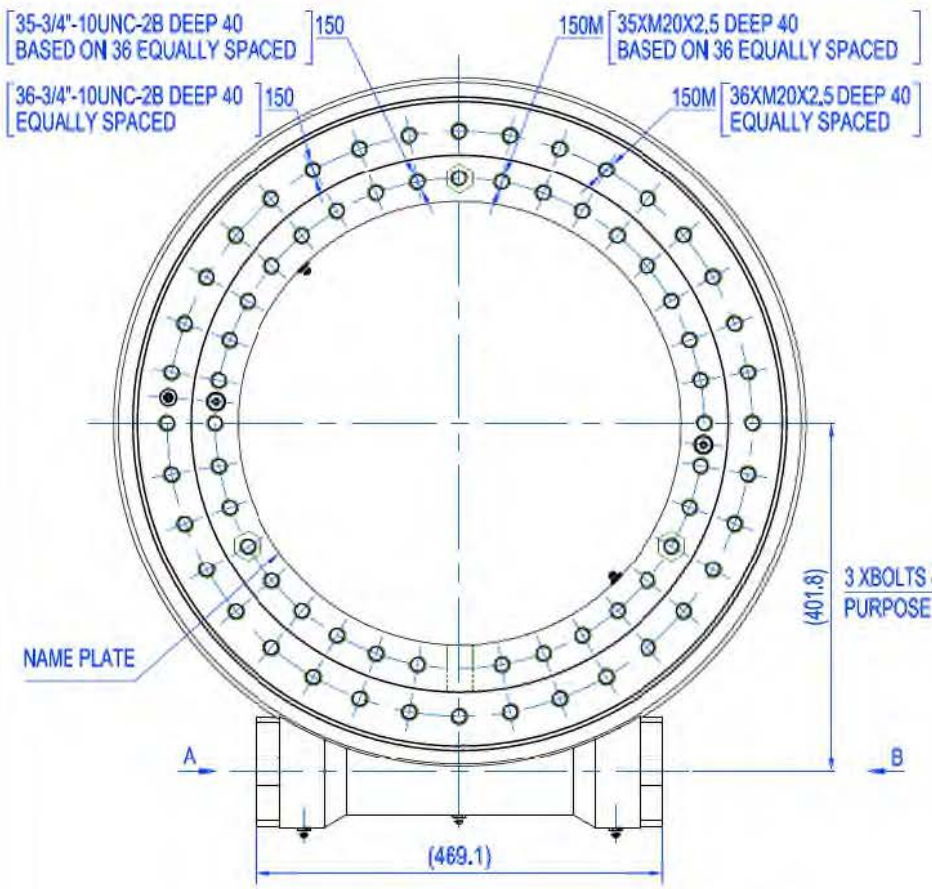

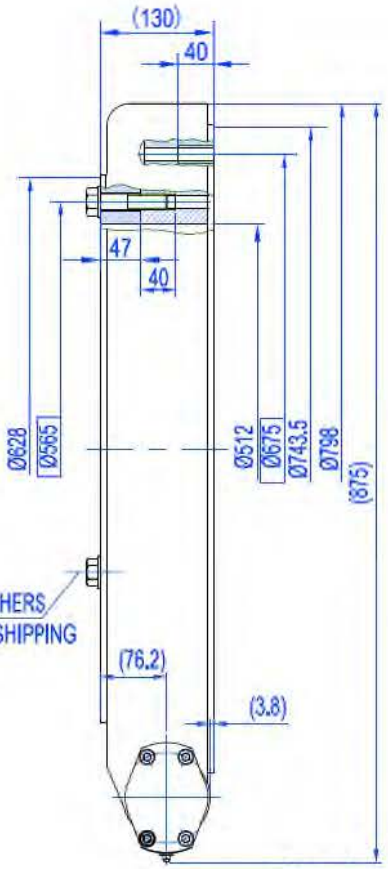

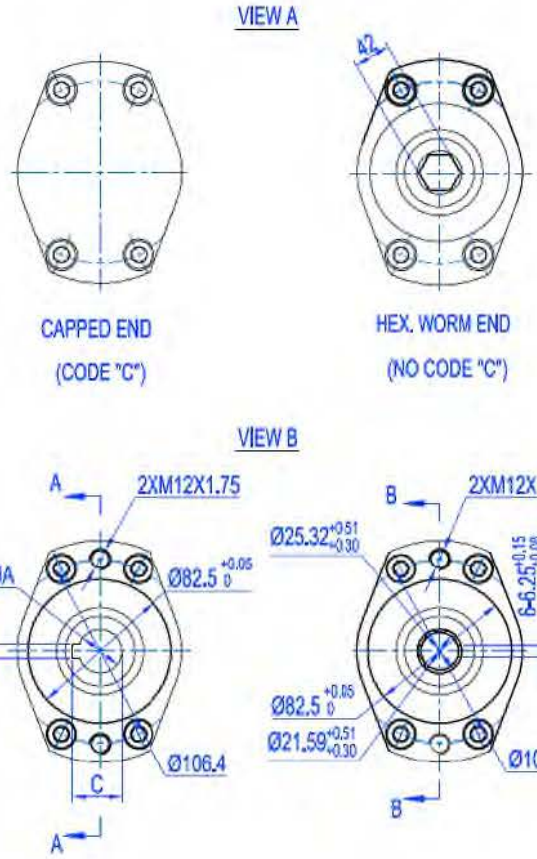

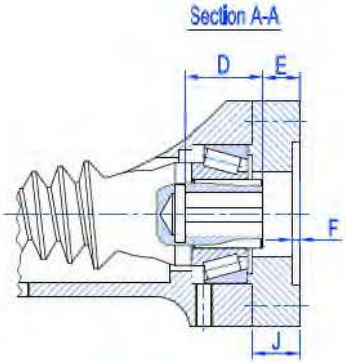

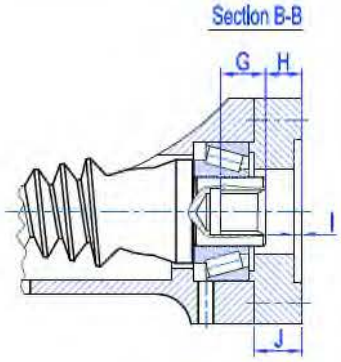

UNIT: mm

TYPE	A	B	C	D	E	F	G	H	I	J
12M	12 +0.018 +0.007	4 +0.075 +0.030	13.8 +0.5 0	23	-3	4.5				27.5
20M	20 +0.021 +0.008	6 +0.075 +0.030	22.8 +0.5 0	30	12	4.5				27.5
25M	25 +0.021 +0.008	8 +0.090 +0.040	28.3 +0.5 0	45	21.2	4.5				27.5
B							25.4	25	4.5	27.5

DESIGNED BY				
CHECKED BY				
APPROVED BY				
ALL PROPRIETARY RIGHTS IN THE SUBJECT MATTER HEREOF ARE RESERVED, AND NO PERMISSION IS GRANTED TO REPRODUCE THIS PRINT IN WHOLE OR IN PART, OR TO DISCLOSE ANY OF THE INFORMATION TO OTHERS.		WEIGHT	SCALE	25" SLEWING DRIVE
		220Kg	NTS	
SYMBOLE ISO	SIZE A3	SHEET	1/1	SE25B-150(M)-R(C)
		THE TOLERANCE NOT MENTIONED IS REFERRED TO ISO 2768-vL,CASTING TOLERANCE ISO 8062-CT10		REV A

SLEWING DRIVES PERFORMANCE DATA

Model Code : SE25B-150(M)-R(C)

Slewing Drive Ratio	150:1
Rotating Output Rated Speed	–
Efficiency	43%
International Protection (IP)	55
Motor Temperature	–
Worm Drive Temperature	– 20℃ to +120℃
Traceability	CEDS
Torsion Stiffness	4,003Nm/mRad
Bending Stiffness	4,722Nm/mRad

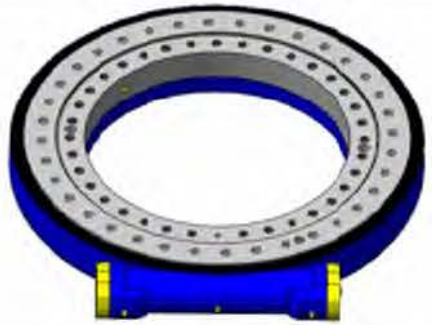

Slewing Drive Loading Data	HC Type				HB Type				HQ Type				HA Type			
Normal Output Torque	12,006	N·m	8,855	ft·lb	14,407	N·m	10,626	ft·lb	19,209	N·m	14,168	ft·lb	24,011	N·m	17,711	ft·lb
Max. Output Torque(3 sec.)	21,498	N·m	15,857	ft·lb	25,797	N·m	19,028	ft·lb	34,396	N·m	25,370	ft·lb	42,995	N·m	31,713	ft·lb
Backwards Holding Torque	136,100	N·m	100,387	ft·lb	136,100	N·m	100,387	ft·lb	136,100	N·m	100,387	ft·lb	136,100	N·m	100,387	ft·lb
Tilting Torque	271,164	N·m	200,011	ft·lb	271,164	N·m	200,011	ft·lb	271,164	N·m	200,011	ft·lb	271,164	N·m	200,011	ft·lb
Static Radial Rating	944.00	KN	212,211	lb	944.00	KN	212,211	lb	944.00	KN	212,211	lb	944.00	KN	212,211	lb
Static Axial Rating	2,360.00	kN	530,528	lb	2,360.00	kN	530,528	lb	2,360.00	kN	530,528	lb	2,360.00	kN	530,528	lb
Dynamic Radial Rating	472.00	KN	106,106	lb	472.00	KN	106,106	lb	472.00	KN	106,106	lb	472.00	KN	106,106	lb
Dynamic Axial Rating	590.00	kN	132,632	lb	590.00	kN	132,632	lb	590.00	kN	132,632	lb	590.00	kN	132,632	lb

DESIGNED BY				BROWN ADVANCE	
CHECKED BY					
APPROVED BY					
ALL PROPRIETARY RIGHTS IN THE SUBJECT MATTER HEREOF ARE RESERVED, AND NO PERMISSION IS GRANTED TO REPRODUCE THIS PRINT IN WHOLE OR IN PART, OR TO DISCLOSE ANY OF THE INFORMATION TO OTHERS.		WEIGHT	SCALE NTS	25" SLEWING DRIVE	
SYMBOLE ISO	SIZE A4	SHEET 1/1		SE25B-150(M)-R(C)	REV A

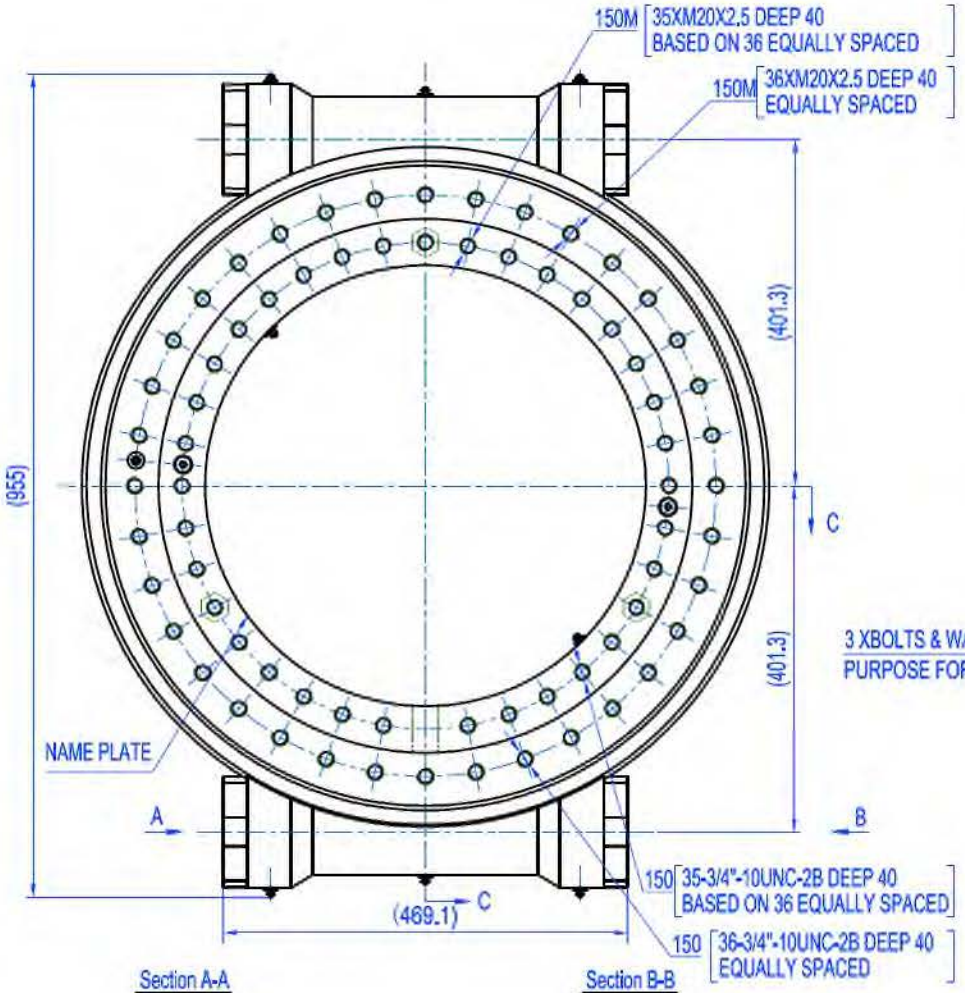

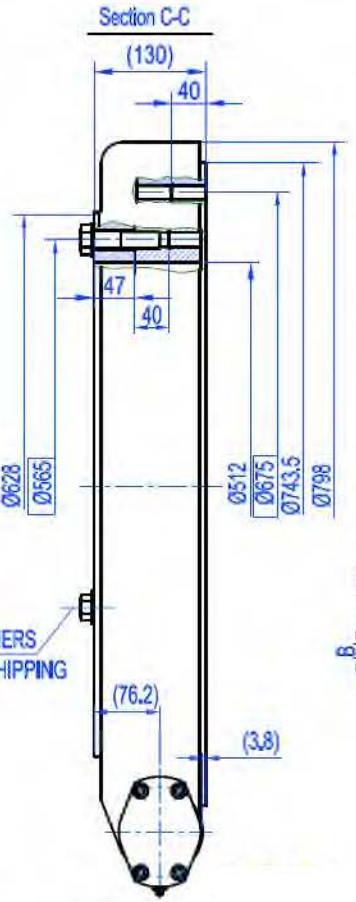

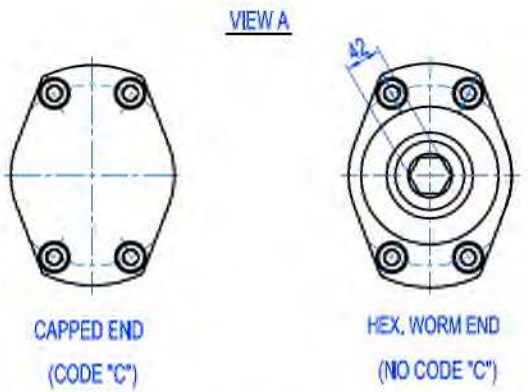

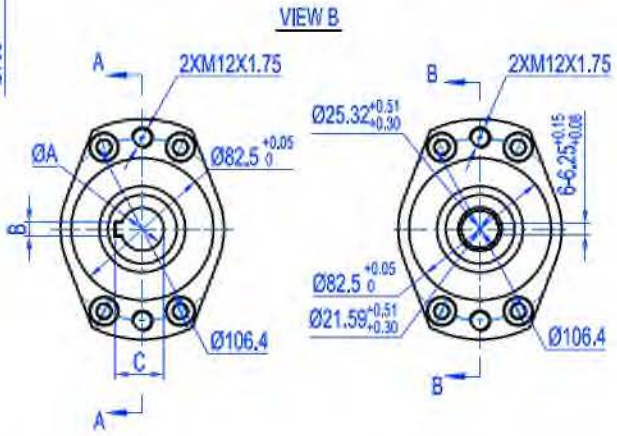

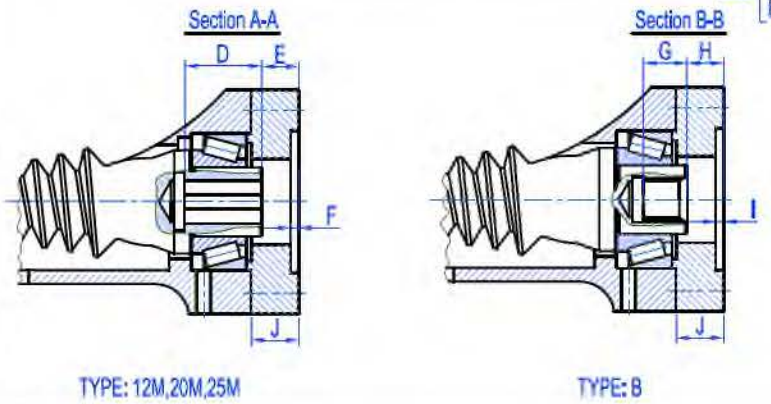

UNIT: mm

TYPE	A	B	C	D	E	F	G	H	I	J
12M	12	4	13.8	23	-3	4,5				27.5
20M	20	6	22.8	30	12	4,5				27.5
25M	25	8	28.3	45	21.2	4,5				27.5
B							25,4	25	4,5	27.5

DESIGNED BY				
CHECKED BY				
APPROVED BY				
ALL PROPRIETARY RIGHTS IN THE SUBJECT MATTER HEREOF ARE RESERVED, AND NO PERMISSION IS GRANTED TO REPRODUCE THIS PRINT IN WHOLE OR IN PART, OR TO DISCLOSE ANY OF THE INFORMATION TO OTHERS.		WEIGHT	SCALE	25" SLEWING DRIVE
		247Kg	NTS	
SYMBOLE ISO	SIZE A3	SHEET	1/1	SE25B-150(M)-R(C)-2 REV A
		THE TOLERANCE NOT MENTIONED IS REFERRED TO ISO 2768-mK.CASTING TOLERANCE ISO 8062-CT10		

SLEWING DRIVES PERFORMANCE DATA

Model Code : SE25B-150(M)-R(C)-2

Slewing Drive Ratio	150:1
Rotating Output Rated Speed	–
Efficiency	43%
International Protection (IP)	55
Motor Temperature	–
Worm Drive Temperature	− 20℃ to + 120℃
Traceability	CEDS
Torsion Stiffness	4,003Nm/mRad
Bending Stiffness	4,722Nm/mRad

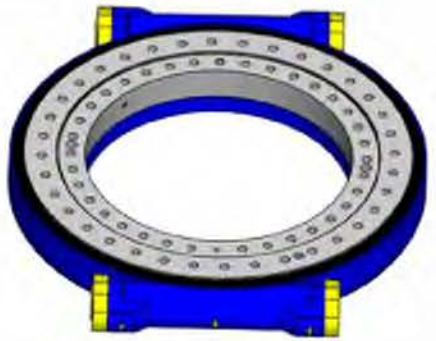

Slewing Drive Loading Data	HC Type				HB Type				HQ Type				HA Type			
Normal Output Torque	18,009	N·m	13,283	ft·lb	21,610	N·m	15,940	ft·lb	28,814	N·m	21,253	ft·lb	36,017	N·m	26,566	ft·lb
Max. Output Torque(3 sec.)	32,247	N·m	23,785	ft·lb	38,696	N·m	28,542	ft·lb	51,594	N·m	38,056	ft·lb	64,493	N·m	47,570	ft·lb
Backwards Holding Torque	272,200	N·m	200,775	ft·lb	272,200	N·m	200,775	ft·lb	272,200	N·m	200,775	ft·lb	272,200	N·m	200,775	ft·lb
Overturning Moment	271,164	N·m	200,011	ft·lb	271,164	N·m	200,011	ft·lb	271,164	N·m	200,011	ft·lb	271,164	N·m	200,011	ft·lb
Static Radial Rating	944.00	KN	212,211	lb	944.00	KN	212,211	lb	944.00	KN	212,211	lb	944.00	KN	212,211	lb
Static Axial Rating	2,360.00	kN	530,528	lb	2,360.00	kN	530,528	lb	2,360.00	kN	530,528	lb	2,360.00	kN	530,528	lb
Dynamic Radial Rating	472.00	KN	106,106	lb	472.00	KN	106,106	lb	472.00	KN	106,106	lb	472.00	KN	106,106	lb
Dynamic Axial Rating	590.00	kN	132,632	lb	590.00	kN	132,632	lb	590.00	kN	132,632	lb	590.00	kN	132,632	lb

DESIGNED BY				BROWN ADVANCE	
CHECKED BY					
APPROVED BY					
ALL PROPRIETARY RIGHTS IN THE SUBJECT MATTER HEREOF ARE RESERVED, AND NO PERMISSION IS GRANTED TO REPRODUCE THIS PRINT IN WHOLE OR IN PART, OR TO DISCLOSE ANY OF THE INFORMATION TO OTHERS.		WEIGHT	SCALE	25" SLEWING DRIVE	
			NTS		
SYMBOLE ISO	SIZE A4	SHEET	1/1	SE25B-150(M)-R(C)-2	REV A